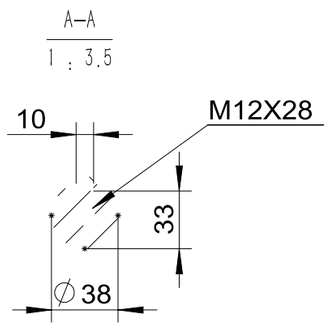

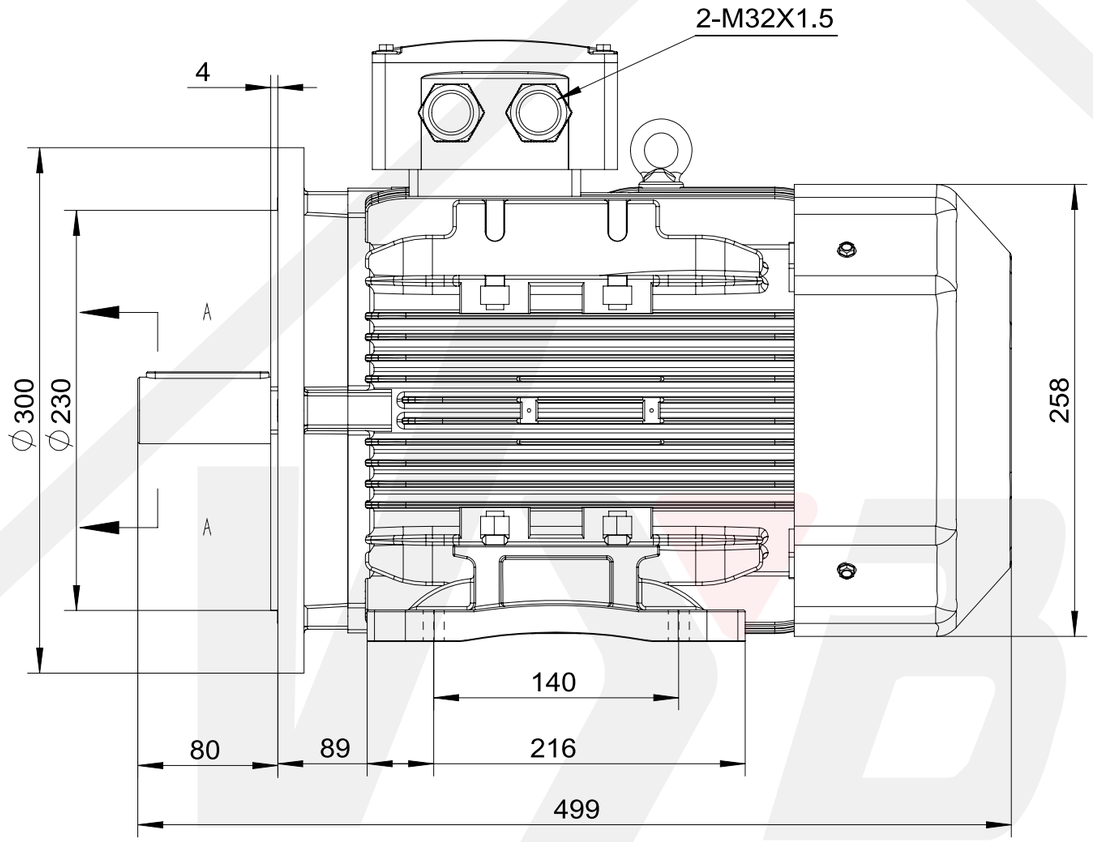

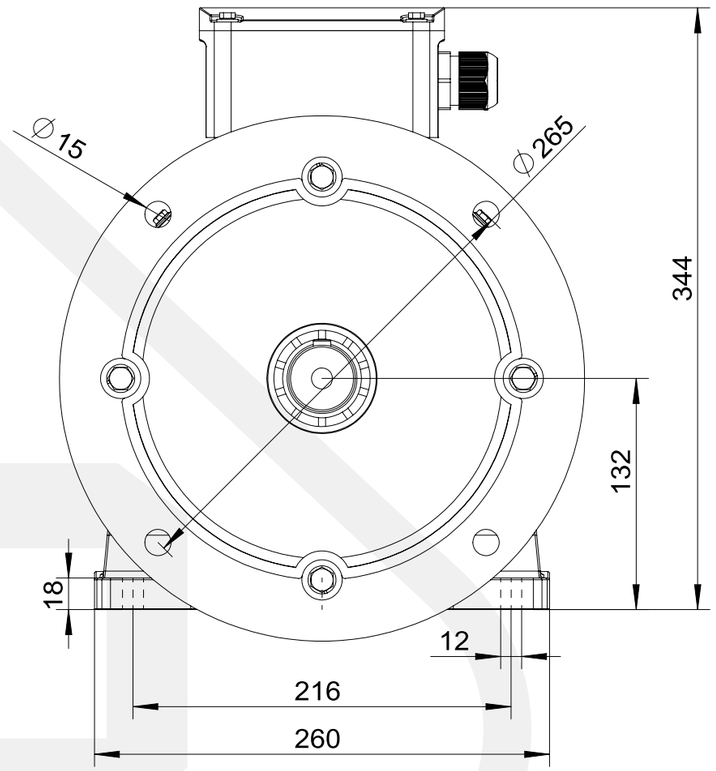

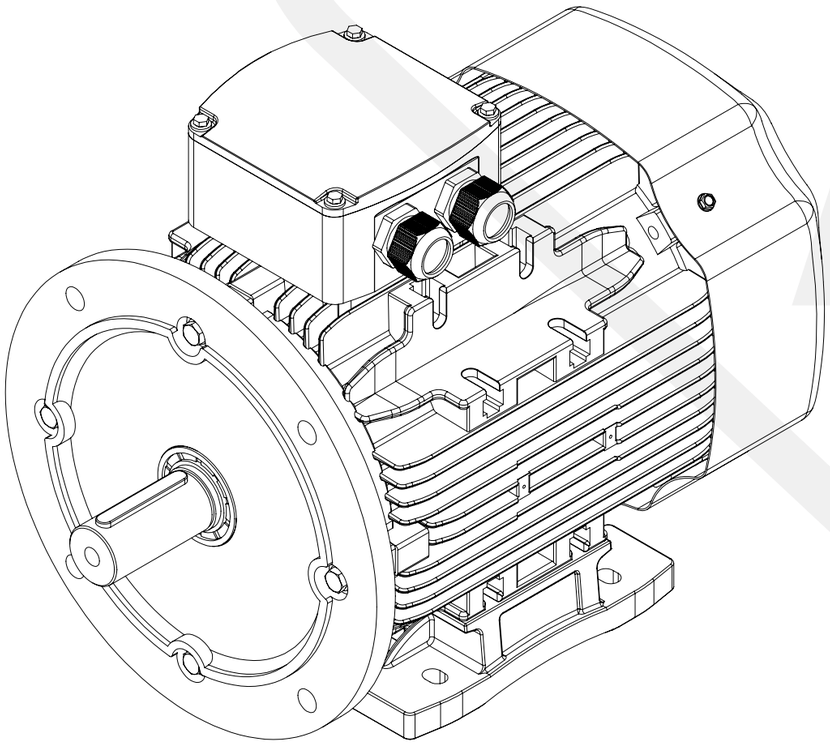

4AL-132S-B35

Mounting diagram