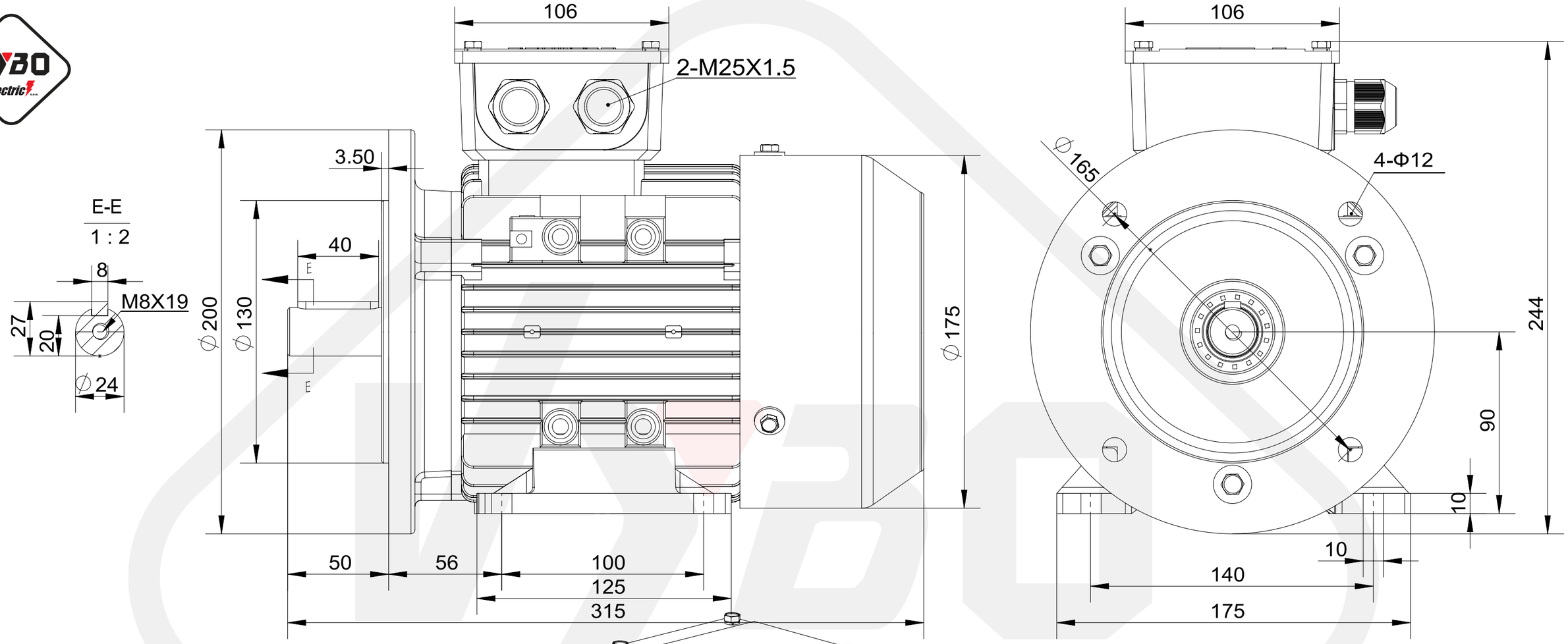

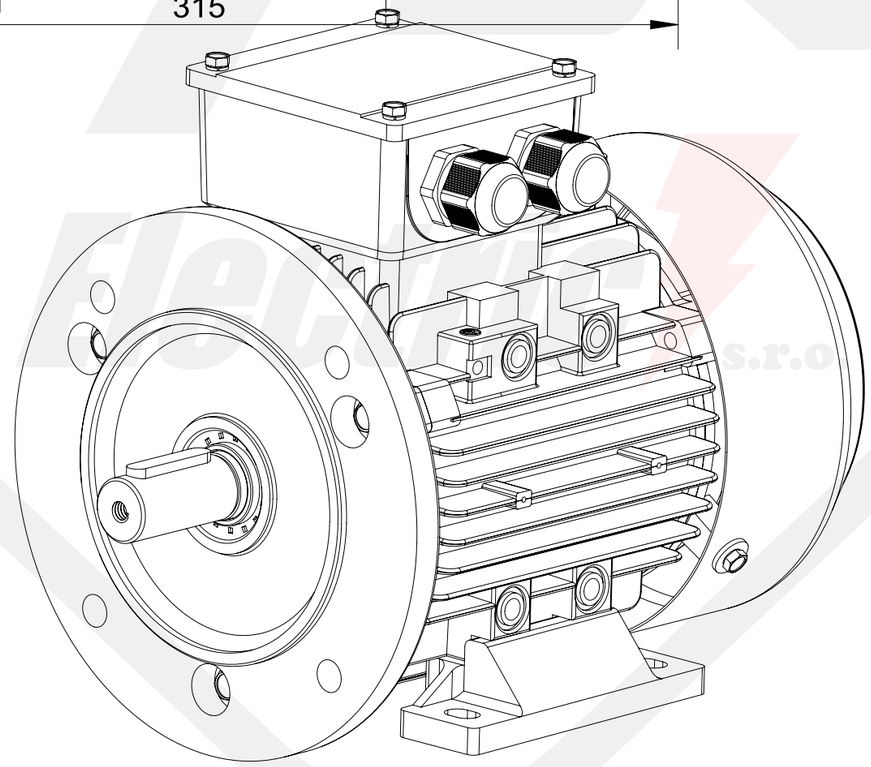

1AL-90S-B35
Mounting diagram