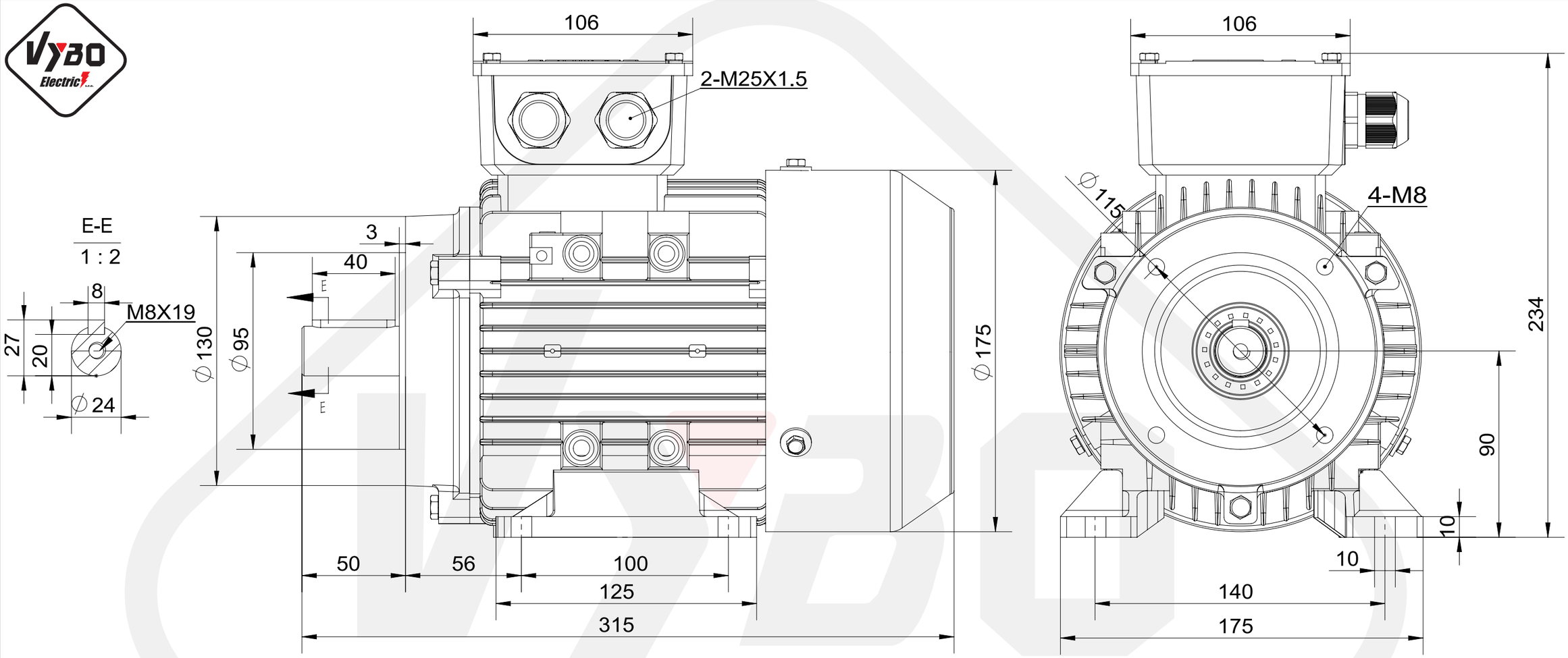

1AL-90S-B34
Mounting diagram