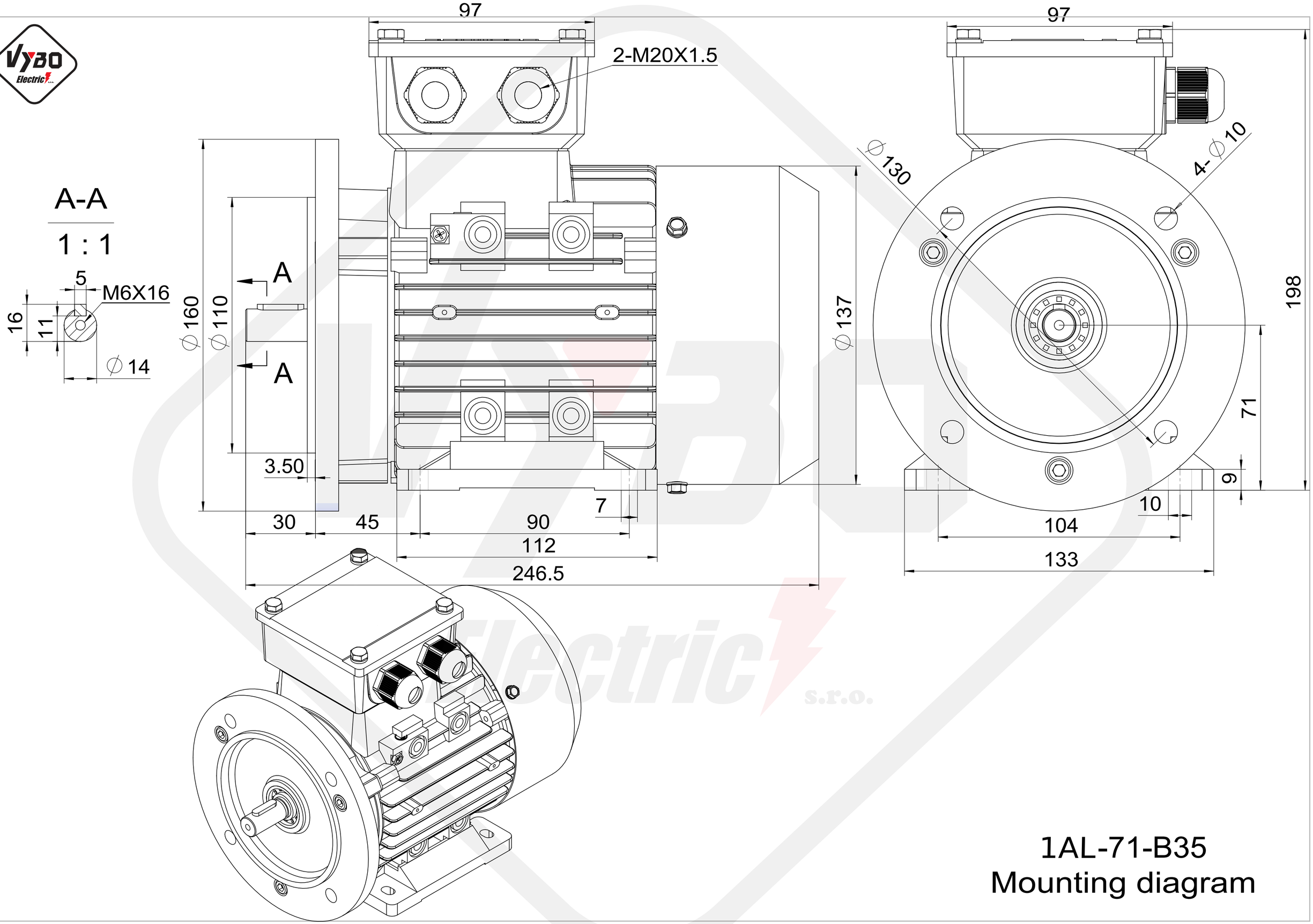

1AL-71-B35
Mounting diagram