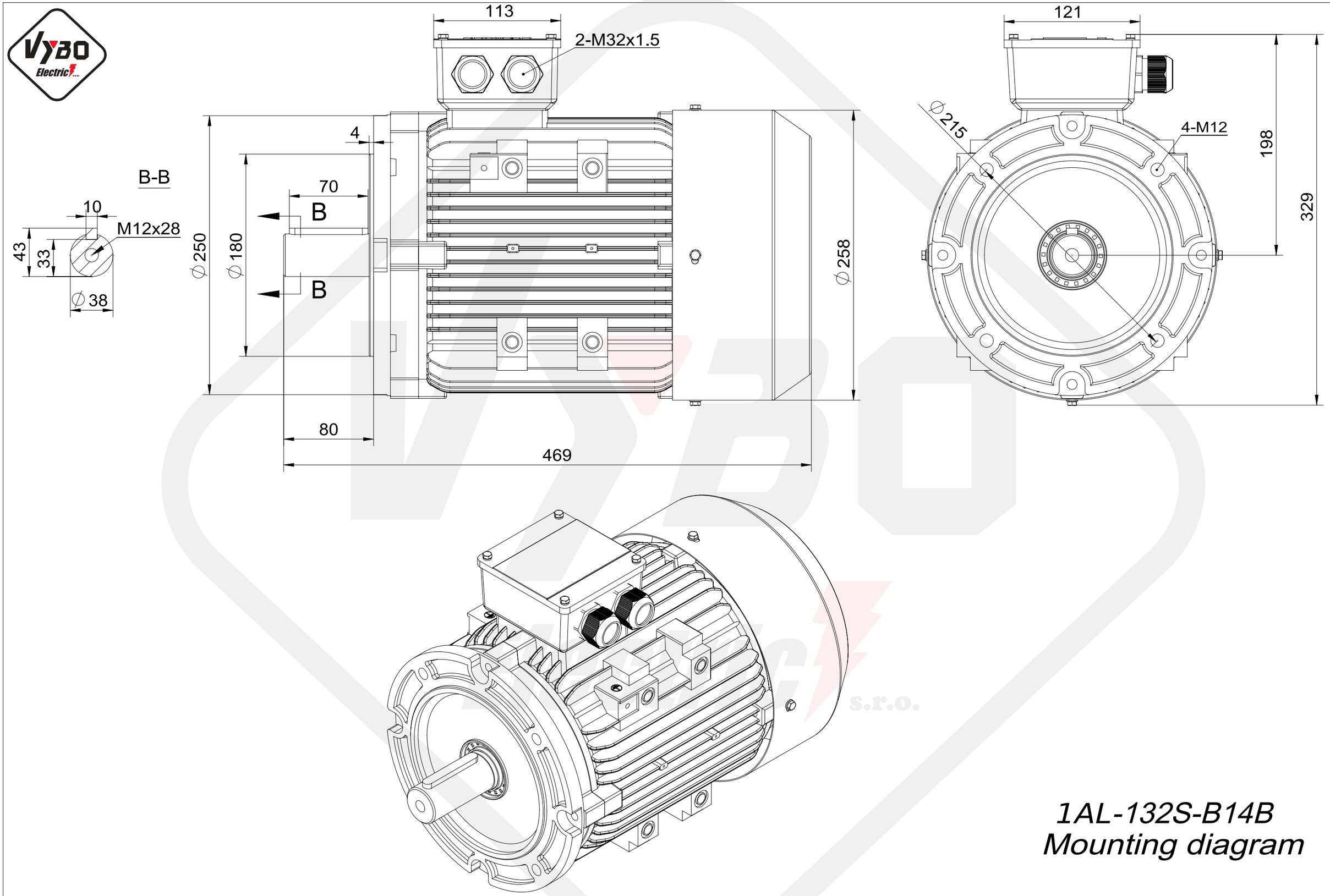

1AL-132S-B14B
Mounting diagram