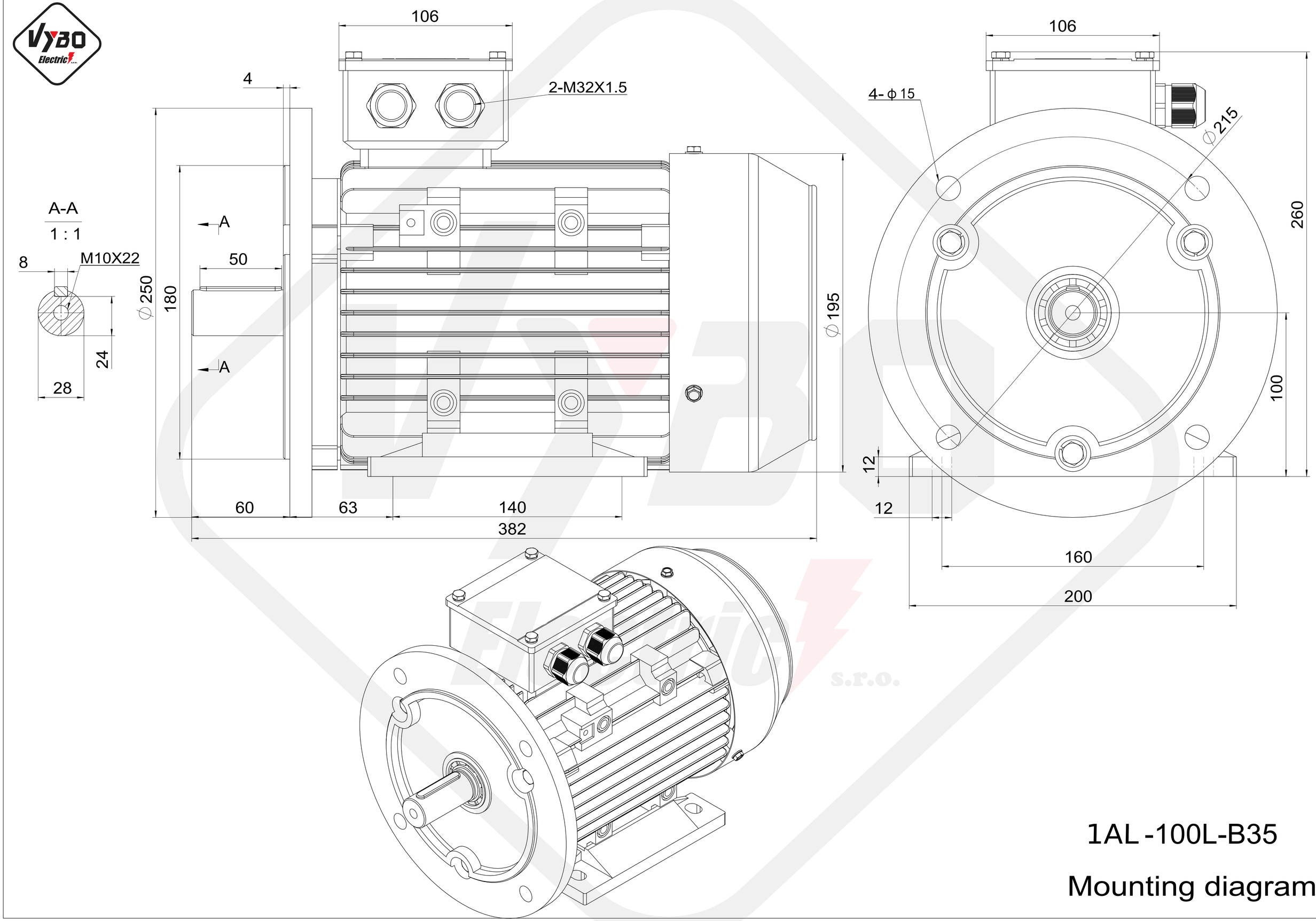

1AL -100L-B35

Mounting diagram